SAWC/FTE
EL CALAFATE

JEPPESEN

29 SEP 23 (11-3)

EL CALAFATE, ARGENTINA
ILS X Rwy 25

ATIS	EL CALAFATE Control	EL CALAFATE Approach	EL CALAFATE Tower	Ground
127.85	125.35	119.95	119.95	121.8

LOC EC	Final Apch Crs	GS D7.0 EC D7.4 ECA	ILS DA(H)	Apt Elev 647′
108.9	252°	2900′ (2268′)	832′ (200′)	Rwy 632′

MISSED APCH: Climb to 2700′ on heading 252°, turn RIGHT direct ECA VOR climbing to 6000′ and hold or as directed by ATC. Do not exceed D19.0 ECA and ECA VOR R-284.

Alt Set: hPa | Rwy Elev: 23 hPa | Trans level: By ATC | Trans alt: 7000′

1. DME required. 2. Circle to land not authorized.

MSA ECA VOR: 130° 6200, 9100, 310°

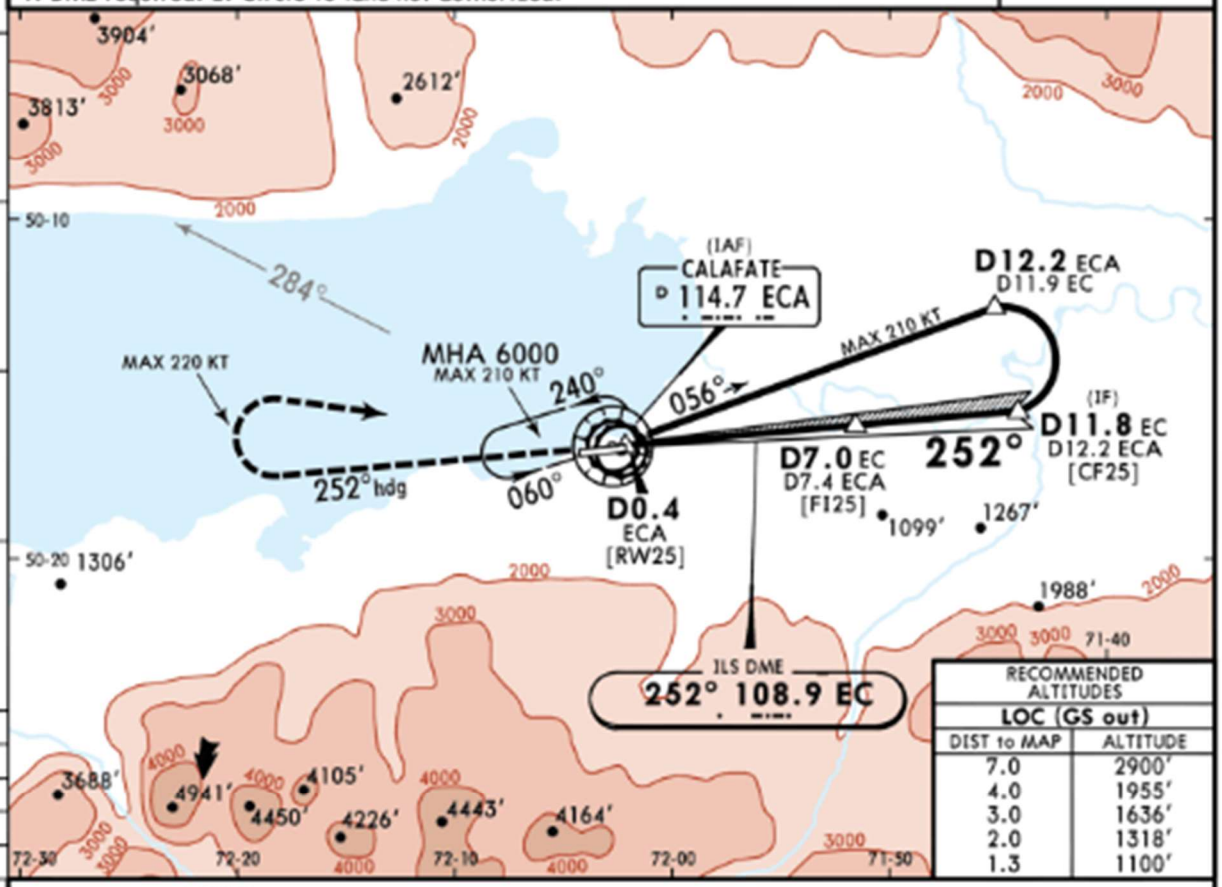

RECOMMENDED ALTITUDES LOC (GS out)	
DIST to MAP	ALTITUDE
7.0	2900′
4.0	1955′
3.0	1636′
2.0	1318′
1.3	1100′

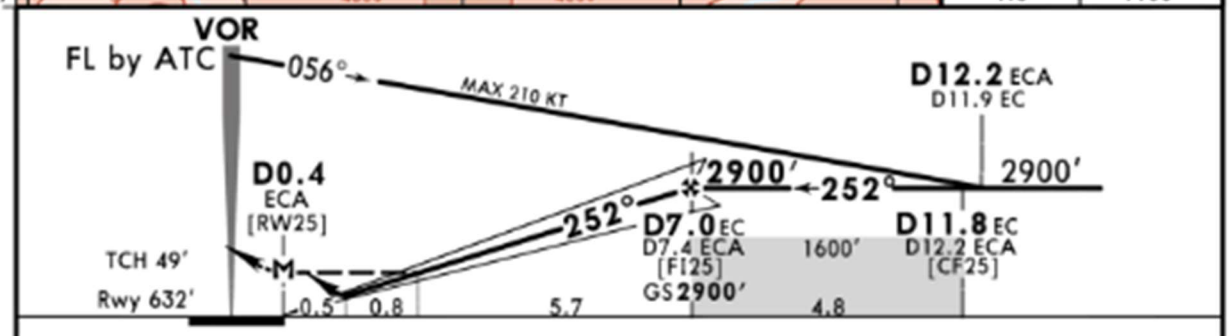

Gnd speed-Kts		70	90	100	120	140	160
GS	3.00°	372	478	531	637	743	849
MAP at D0.4 ECA or FAF to MAP	7.0	6:00	4:40	4:12	3:30	3:00	2:38

PAPI-L | 2700′ on 252° hdg

State — STRAIGHT-IN LANDING

ILS/DME	LOC (GS out)
DA(H) 832′(200′)	MDA(H) 1100′(468′)

PANS OPS

A	R/V1200m	V2400m
B		
C		V2600m
D		

CHANGES: Minimums, new AOM concept.

© JEPPESEN, 2013, 2023. ALL RIGHTS RESERVED.

NAVIGRAPH CHARTS INTENDED FOR FLIGHT SIMULATION ONLY - NOT FOR NAVIGATIONAL USE

Chart linked to: AHS592E